8 SERIES: 8.4 TurboS

http://tiny.cc/8seriesEN

MAX LIFTING CAPACITY	ENGINE POWER	SPEED	FLOW RATE	LIFT HEIGHT
1470 kg	25 hp 18.4 kW	25 km/h	74 l/min	2,98 m

NEW

COMPLIANT WITH STAGE V AND TIER 4 FINAL EMISSION STANDARDS

ONE DRIVE

ACI ATTACHMENT CONTROL INTERFACE

CRUISE **C**ONTROL

Model	8.4 TurboS
Engine	Rehlko / Kohler KSD 1403 TCA - 3 cylinder - 1391 cc
Emission Standards	Stage V - TIER 4 Final
Power (Iso Gross) / Torque	18.4 kW - 25 HP / 120 Nm @ 1400 rpm
Fuel	Diesel
Transmission	Hydrostatic OneDrive
Drive speed (max.) (1)	12,5 - 25 km/h (7.8 - 15.5 mph)
Aux. hydraulics oil flow	74 l/min (19.5 GPM)
Max. lifting height	2,98 m (117.3 in)
Tipping load, max. (2)	1840 kg (4056 lbs)
Lifting capacity straight, max. (3)	1470 kg (3240 lbs)
Breakout force / 50 cm	1700 kg (3748 lbs)
Pushing force (c)	2050 kgf (2050 kp)
Average ground pressure (w/std tires)	1025 kg/m² (210 lbs/sqft)
Turning radius: inside/outside	825/2090 mm (32.5/82.3 in)
Standard tires (Tractor profile)	26X12.00-12 ET-50
Weight	1680 kg (3710 lbs)
Product Code	**C963045**

(1) Maximum speed that can be achieved with the largest diameter tires available, on a flat surface and machine without attachments.
(2) Tipping limit, when the machine is straight, with rear weights and boom lifted just off the ground. Weight of attachment included.
(3) Maximum load that can be lifted just off the ground when the machine is straight and with rear weights. Weight of attachment is included.
Note: Refer to the Operator's manual for the comprehensive load diagram.

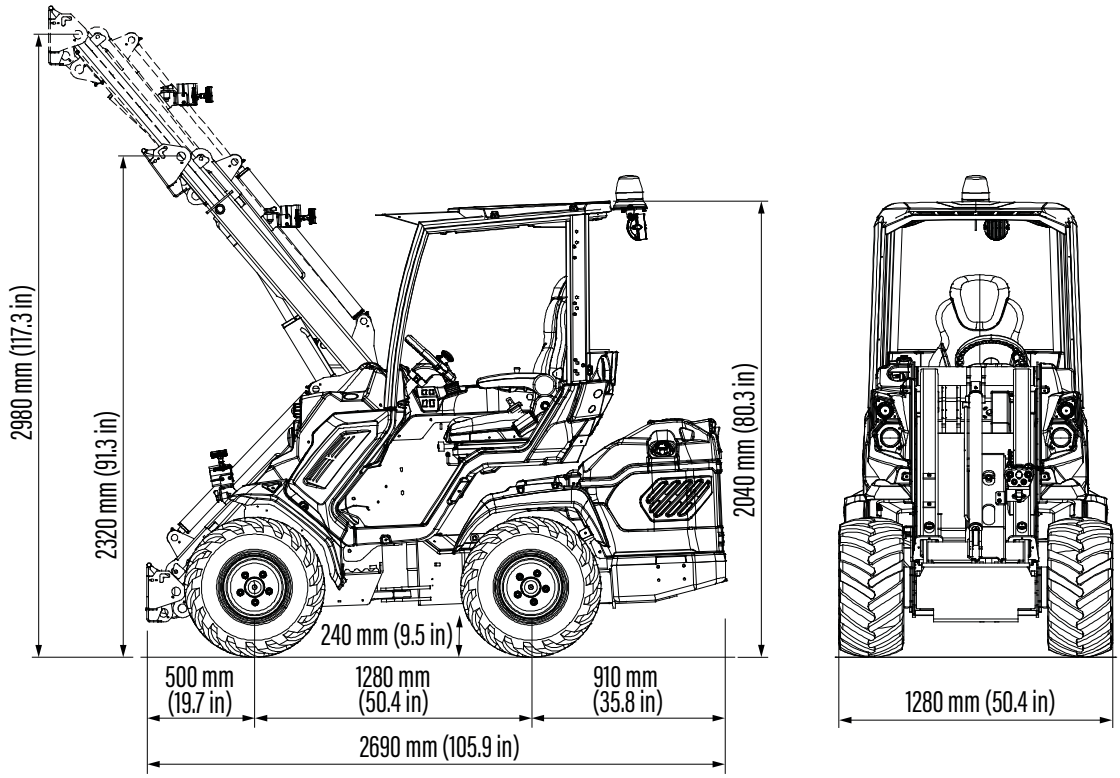

Tires size	Height	Width
23X8.50-12	2020 mm (79.5 in)	1070 mm (42.2 in)
23X10.50-12 ET-25	2020 mm (79.5 in)	1130 mm (44.5 in)
26X12.00-12 ET-50	2040 mm (80.3 in)	1280 mm (50.4 in)
27X8.50-15	2080 mm (81.9 in)	1070 mm (42.1 in)
27X10.50-15	2080 mm (81.9 in)	1150 mm (45.3 in)

FEATURES

- Rehlko / Kohler KSD 1403 TCA, 3 cyl. -1391 cc, diesel engine water cooled, turbo intercooler, electronic injection system, electric start, glow plug
- Stage V and Tier 4 Final compliant engine
- **OneDrive System:** DBS (Dynamic Block System), Cruise Control and Torque Divider activated by Joystick
- ETC - Electronic Throttle Control
- ACI with Multifunction joystick (22 functions)
- Unbreakable Body Panels
- 2 Speed
- Hydraulically pilot operated variable displacement drive pump
- Self-locking multi-disk parking brake
- Hi-Flow system
- Integrated rear weights
- Self-levelling double-H telescopic boom
- Radial Piston high efficiency and heavy duty wheel motors
- 4WD hydrostatic Direct Drive motors, proportional servo control
- Hydraulic oil cooler
- Hydraulic multiconnector
- ROPS-FOPS Level I
- LCD graphic display with programmed service
- 2 front working lights
- Ergonomic fully adjustable suspension heated seat with armrests and seat belt

8 SERIES - OPTIONS

Options	Code
110 V engine block heater	C885255
220 V engine block heater	C885250
2" Hitch receiver (not compatible with C883036 and C883066)	C883062
3 additional working halogen lights	C883064
3 additional working LED lights	C883018
A/C system with heating for fully enclosed cab - for 8.5S K model (C883001 required - not aftermarket)	C883801
A/C system with heating for fully enclosed cab - for 8.4 TurboS model (C883001 required - not aftermarket)	C883815
Additional front hydraulic outlets	C883024
Attachment coupling plate for rear mounting (not compatible with C883036 and C883066)	C880031
Automatic locking plate	C880015
Backup warning beeper	C883021
Beacon light	C883039
Driver area cover	C880049
Flat face coupling kit	C880221
Floating boom valve	C883011
Fully enclosed cab with sound insulation linen	C883001
GPS tracker	C883075
Heating system for 8.4 TurboS	C883072
Heating system for 8.5S K	C883074
Left protection bar for operator	C883030
Mirrors	C880081
Polycarbonate back window (smart cabin)	C883035
Polycarbonate right side (smart cabin)	C883034
Polycarbonate windscreen (smart cabin)	C883000
Rear 12V electric socket (only 8.4 TurboS)	C883022
Rear 12V electric socket (only 8.5SK)	C883023
Rear bull bar with side extensions (not compatible with C883062-C885014-C880031) for 8.4 TS	C883036
Rear bull bar with side extensions (not compatible with C883062-C885014-C880031) for 8.5S K	C883066
Rear hydraulic outlets - double for 8.4 TurboS	C883014

8 SERIES - OPTIONS

Options	Code
Rear hydraulic outlets - double for 8.5S K	C883805
Rear hydraulic outlets - single for 8.4 TurboS	C883013
Rear hydraulic outlets - single for 8.5S K	C883015
Rear side weights 80 kg (40 kg + 40 kg) / 176 lbs (88 lbs + 88 lbs)	C883069
Rear side weights 160 kg (2x40 kg + 2x40 kg) / 352 lbs (2x88lbs+2x88lbs)	C883077
Rear weights 180 kg (90 kg + 90 kg) / 396 lbs (198lbs + 198 lbs)	C880054
Ride control (telescopic boom anti-rebound kit)	C883095
Skid tires 27x10.50-15, set of 4 for 8.4 TurboS	C884012
Skid tires 27x8.50-15, set of 4 for 8.4 TurboS	C884011
Snow chains for wheels 23x10.50-12, set of 2	C880046
Snow chains for wheels 23x8.50-12, set of 2	C880041
Snow chains for wheels 26x12.00-12, set of 2	C880042
Snow chains for wheels 27x8.50-15, set of 2	C880045
Tie down bracket on wheel hub, set of 4	C883065
Tractor tires 23x10.50-12 ET-25, set of 4 for 8.4 TurboS	C884007
Tractor tires 23x8.50-12, set of 4 for 8.4 TurboS	C884005
Tractor tires 26x12.00-12 ET-50, set of 4 for 8.4 TurboS	C884009
Trailer coupling (not compatible with C883036 and C883066)	C885014
Turf tires 23x10.50-12 ET-25, set of 4 for 8.4 TurboS	C884008
Turf tires 23x8.50-12, set of 4 for 8.4 TurboS	C884006
Turf tires 26x12.00-12 ET-50, set of 4 for 8.4 TurboS	C884010
Turf tires 400/50-15 (31x15.50-15 ET -100), set of 4 for 8.5S K	C884014
Warning & Safety lights for road travel (with mirrors)	C883009
Wheel spacer 10 mm (0.4 in), set of 4 (max. 1 pcs for wheel) (not with 400/50-15 ET-100)	C880090
Wheel spacer 55 mm (2.2 in), set of 4 (not with 400/50-15 ET-100)	C885010
EU Certificate of Conformity (CoC) for road approval.	COC