EZ SERIES: EZ8

http://tiny.cc/EZseries-EN

MAX LIFTING CAPACITY	BATTERY CAPACITY	SPEED	FLOW RATE	LIFT HEIGHT
1420 kg	21,5 kWh	12 km/h	35 l/min	2,98 m

100% ELECTRIC

Li ION BATTERY

SMART CHARGER

21,5 kWh CAPACITY

2 ELECTRIC MOTORS

QUICK CHARGE

EMISSION ZERO

LONG OPERATING TIME

Model	EZ 8
Transmission	Hydrostatic
Drive speed (max.) (1)	12 km/h (7.5 mph)
Aux. hydraulics oil flow	35 l/min (9.3 GPM)
Max. lifting height	2,98 m (117.3 in)
Tipping load, max. (2)	1780 kg (3924 lbs)
Lifting capacity straight, max. (3)	1420 kg (3130 lbs)
Breakout force / 50 cm	1700 kg (3748 lbs)
Pushing force (c)	2050 kgf (2050 kp)
Average ground pressure (w/standard tires)	958 kg/m² (196 lbs/sqft)
Turning radius: inside/outside	825/2090 mm (32.5/82.3 in)
Standard tires (Tractor profile)	26X12.00-12 ET-50
Weight	1570 kg (3470 lbs)
Product Code	**C963021**
EZ8 Pack 1 (ACI with Multifunction joystick)	**C963022**

Electric system and battery	
Battery type	LiFePO4
Battery capacity	21,5 kWh
Operation time (4) ECO MODE	4,5 h
Operation time (4) POWER MODE	3 h
Electric motors	2
Charging system	Integrated charger
Charger type	Sealed single-phase
Charger Input Voltage	110 - 230 ± 10% VAC
Charger Input Frequency	50 ÷ 60 Hz
Charger Absorbed Current	Max. 14 A
Charging Current (230 VAC)	Max. 60 A
Charging Current (120 VAC)	Max. 30 A
Charger plug type	CEE 2P+T
Charger Protection	Output short-circuit, Inverse polarity

(1) Maximum speed that can be achieved with the largest diameter tires available, on a flat surface and machine without attachments.
(2) Tipping limit, when the machine is straight, with rear weights and boom lifted just off the ground. Weight of attachment included.
(3) Maximum load that can be lifted just off the ground when the machine is straight and with rear weights. Weight of attachment is included.
(4) The operation time of machine varies highly depending on the type of work it is performing. No hydraulic attachments used.
Note: Refer to the Operator's manual for the comprehensive load diagram.

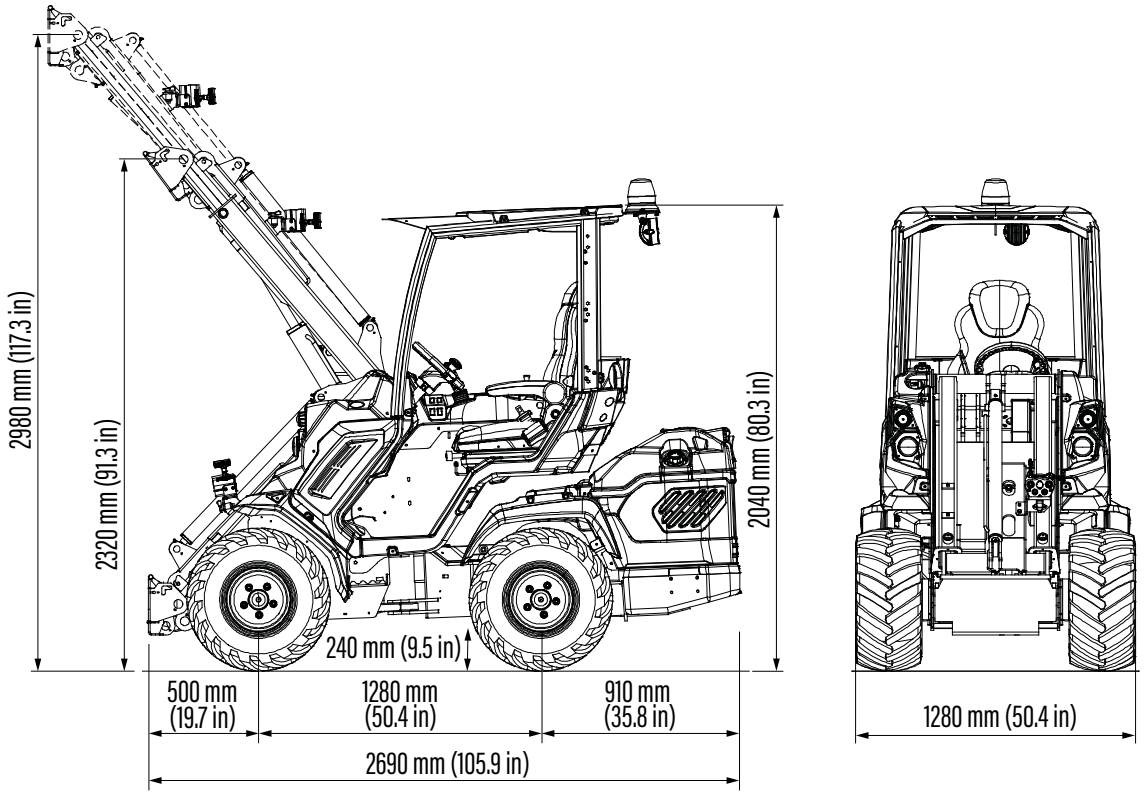

Tires size	Height	Width
23X8.50-12	2020 mm (79.5 in)	1070 mm (42.2 in)
23X10.50-12 ET-25	2020 mm (79.5 in)	1130 mm (44.5 in)
26X12.00-12 ET-50	2040 mm (80.3 in)	1280 mm (50.4 in)
27X8.50-15	2080 mm (81.9 in)	1070 mm (42.1 in)
27X10.50-15	2080 mm (81.9 in)	1150 mm (45.3 in)

FEATURES

- Twin Motors Single Ended Circuits
- LI-ION Battery
- Integrated Smart Battery Charger
- External fast charging station available
- Zero Emission
- Low Noise
- Braking Energy Recovery System
- Unbreakable Body Panels
- 4WD hydrostatic Direct Drive motors
- DBS (Dynamic Block System)
- Self-levelling double-H telescopic boom
- ACI with Multifunction joystick (22 functions) on Pack 1
- Self-locking multi-disk parking brake
- LCD graphic display with programmed service
- 2 front led working lights
- Ergonomic full adjustable suspension seat with armrests and seat belt
- Radial piston high efficiency and heavy duty wheel motors
- Hydraulic multiconnector
- ROPS-FOPS Level I

EZ SERIES: EZ8 LONG RANGE

http://tiny.cc/EZ8seriesEN

LONG RANGE

MAX LIFTING CAPACITY	BATTERY CAPACITY	SPEED	FLOW RATE	LIFT HEIGHT
1420 kg	29,2 kWh	12 km/h	35 l/min	2,98 m

100% ELECTRIC

Li ION BATTERY

SMART CHARGER

29,2 kWh CAPACITY

2 ELECTRIC MOTORS

QUICK CHARGE

EMISSION ZERO

LONG OPERATING TIME

Model	EZ 8 Long Range
Transmission	Hydrostatic
Drive speed (max.) (1)	12 km/h (7.5 mph)
Aux. hydraulics oil flow	35 l/min (9.3 GPM)
Max. lifting height	2,98 m (117.3 in)
Tipping load, max. (2)	1780 kg (3924 lbs)
Lifting capacity straight, max. (3)	1420 kg (3130 lbs)
Breakout force / 50 cm	1700 kg (3748 lbs)
Pushing force (c)	2050 kgf (2050 kp)
Average ground pressure (w/standard tires)	958 kg/m² (196 lbs/sqft)
Turning radius: inside/outside	825/2090 mm (32.5/82.3 in)
Standard tires (Tractor profile)	26X12.00-12 ET-50
Weight	1570 kg (3470 lbs)
Product Code	**C963023**
EZ8 Long Range Pack 1 (ACI with Multifunction joystick)	**C963024**

Electric system and battery	
Battery type	LiFePO4
Battery capacity	29,2 kWh
Operation time (4) ECO MODE	6 h
Operation time (4) POWER MODE	4,5 h
Electric motors	2
Charging system	Integrated charger
Charger type	Sealed single-phase
Charger Input Voltage	110 - 230 ± 10% VAC
Charger Input Frequency	50 ÷ 60 Hz
Charger Absorbed Current	Max. 14 A
Charging Current (230 VAC)	Max. 60 A
Charging Current (120 VAC)	Max. 30 A
Charger plug type	CEE 2P+T
Charger Protection	Output short-circuit, Inverse polarity

(1) Maximum speed that can be achieved with the largest diameter tires available, on a flat surface and machine without attachments.
(2) Tipping limit, when the machine is straight, with rear weights and boom lifted just off the ground. Weight of attachment included.
(3) Maximum load that can be lifted just off the ground when the machine is straight and with rear weights. Weight of attachment is included.
(4) The operation time of machine varies highly depending on the type of work it is performing. No hydraulic attachments used.
Note: Refer to the Operator's manual for the comprehensive load diagram.

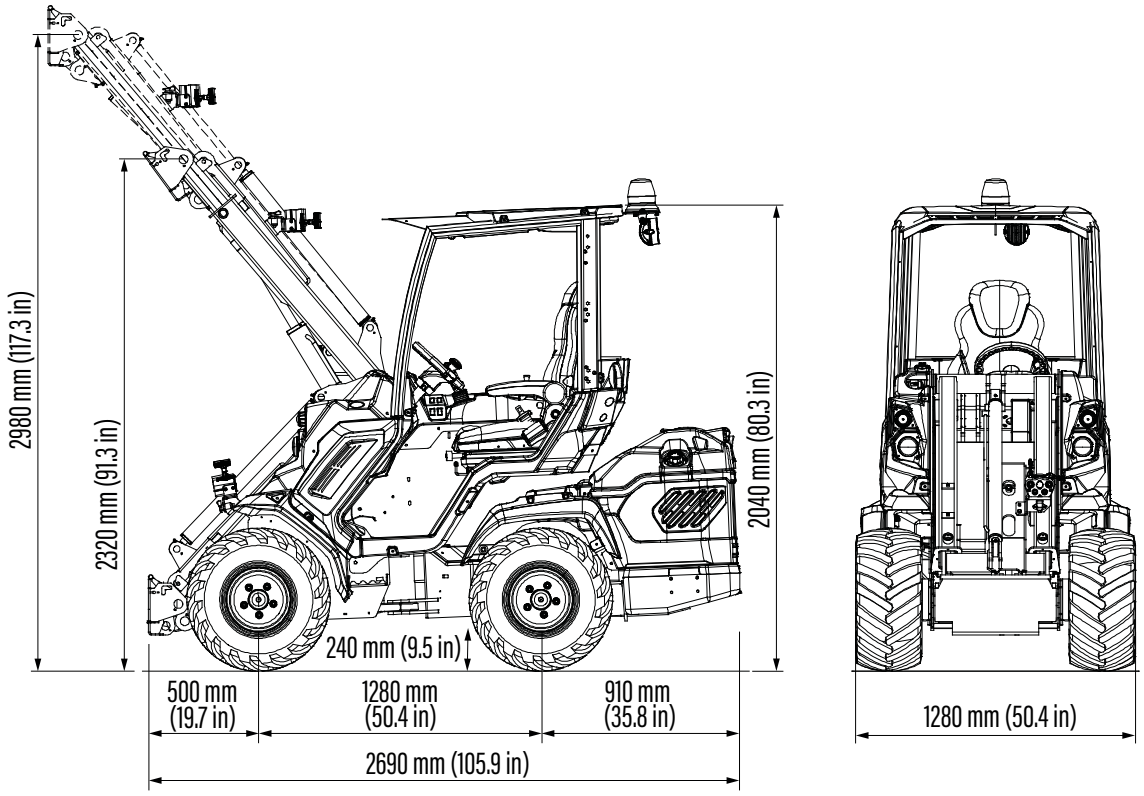

Tires size	Height	Width
23X8.50-12	2020 mm (79.5 in)	1070 mm (42.2 in)
23X10.50-12 ET-25	2020 mm (79.5 in)	1130 mm (44.5 in)
26X12.00-12 ET-50	2040 mm (80.3 in)	1280 mm (50.4 in)
27X8.50-15	2080 mm (81.9 in)	1070 mm (42.1 in)
27X10.50-15	2080 mm (81.9 in)	1150 mm (45.3 in)

FEATURES

- Twin Motors Single Ended Circuits
- LI-ION Battery
- Integrated Smart Battery Charger
- External fast charging station available
- Zero Emission
- Low Noise
- Braking Energy Recovery System
- 4WD hydrostatic Direct Drive motors
- Unbreakable Body Panels
- DBS (Dynamic Block System)
- Self-levelling double-H telescopic boom
- ACI with Multifunction joystick (22 functions) on Pack 1
- Self-locking multi-disk parking brake
- LCD graphic display with programmed service
- 2 front led working lights
- Ergonomic full adjustable suspension seat with armrests and seat belt
- Radial piston high efficiency and heavy duty wheel motors
- Hydraulic multiconnector
- ROPS-FOPS Level I

EZ 7 / EZ8 - OPTIONS

Options	Code
2" Hitch receiver (not compatible with C883036)	C883062
3 additional working LED lights	C883018
Automatic coupling plate	C880015
Attachment coupling plate for rear mounting (not compatible with C883036)	C880031
Beacon light	C883039
Driver area cover	C880049
Fast charging station 160A (EZ8 only)	C883808
Fast charging station 95A (EZ8 only)	C883809
Flat face coupling kit	C880221
Floating boom valve	C883011
GPS tracker	C883075
Left protection bar for operator	C883030
Mirrors	C880081
Multifunction joystick with ACI	C883080
Polycarbonate back window (smart cabin)	C883035
Polycarbonate right side (smart cabin)	C883034
Polycarbonate windscreen (smart cabin)	C883000
Rear bull bar with side extensions (not compatible with C883062, C885014 and C880031)	C883036
Rear side weights 80 kg (40 kg + 40 kg) / 176 lbs (88 lbs + 88 lbs)	C883069
Rear side weights 160 kg (2x40 kg + 2x40 kg) / 352 lbs (2x88lbs+2x88lbs)	C883077
Rear weights 180 kg (90 kg + 90 kg) / 396 lbs (198lbs + 198 lbs)	C880054
Ride control (telescopic boom anti-rebound kit)	C883095
Skid tires 27x10.50-15, set of 4	C884012
Skid tires 27x8.50-15, set of 4	C884011
Snow chains for wheels 23x10.50-12, set of 2	C880046
Snow chains for wheels 23x8.50-12, set of 2	C880041
Snow chains for wheels 26x12.00-12, set of 2	C880042
Snow chains for wheels 27x8.50-15, set of 2	C880045
Tie down bracket on wheel hub, set of 4	C883065

EZ 7 / EZ8 - OPTIONS

Options	Code
Torque divider	C883600
Tractor tires 23x10.50-12 ET-25, set of 4	C884007
Tractor tires 23x8.50-12, set of 4	C884005
Trailer coupling (not compatible with C883036)	C885014
Turf tires 23x10.50-12 ET-25, set of 4	C884008
Turf tires 23x8.50-12, set of 4	C884006
Turf tires 26x12.00-12 ET-50, set of 4	C884010
Warning & Safety lights for road travel (with mirrors)	C883814
Wheel spacer 10 mm (0.4 in), set of 4 (max. 1 pcs for wheel)	C880090
Wheel spacer 55 mm (2.2 in), set of 4 (max. 1 pcs for wheel)	C885010
ACI Upgrade	C090027